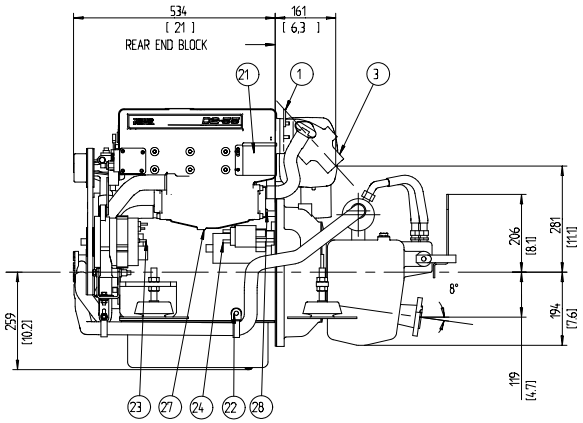

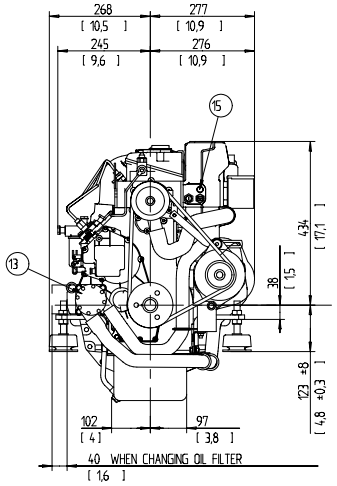

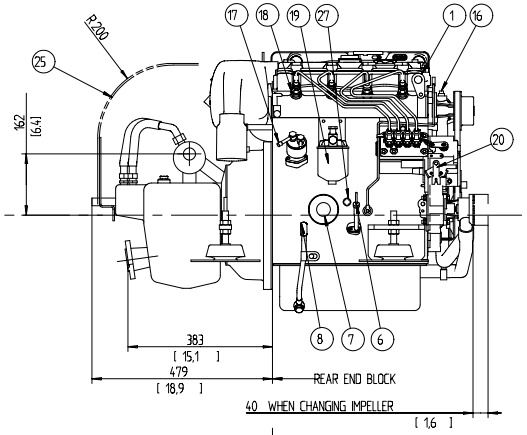

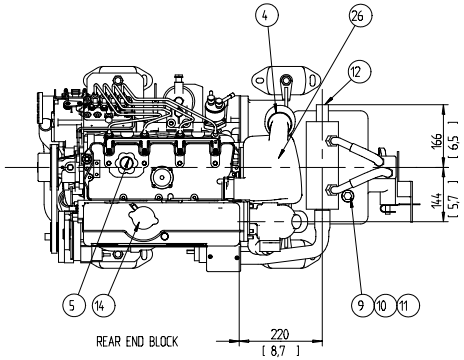

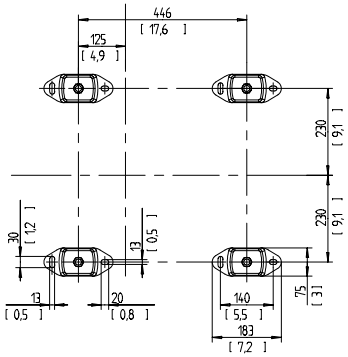

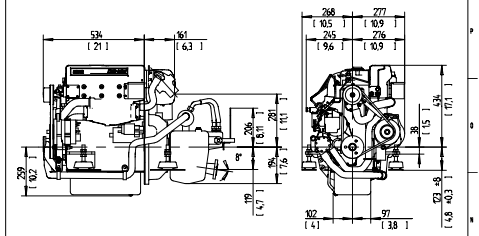

1 LIFTING DEVICE

3 EXHAUST ELBOW FOR HOSE I.D 57
4 AIR FILTER
5 OIL FILLING
6 OIL DIPSTICK ENGINE
7 OIL FILTER
8 OIL DRAIN FOR PUMP, ENGINE
9 OIL DIPSTICK REVERSE GEAR
10 OIL FILLER CAP REVERSE GEAR
11 OIL DRAIN FOR PUMP, REVERSE GEAR
12 WATER INLET FOR HOSE I.D 32
13 SEA WATER PUMP
14 WATER FILLER CAP FRESH WATER
15 HEAT WATER OUTLET
16 HEAT WATER INLET
17 FUEL CONNECTION FOR HOSE I.D 9
18 FUEL RETURN CONNECTION FOR HOSE I.D 9
19 FUEL FILTER
20 SPEED CONTROL LEVER
21 CONNECTION BOX FOR EXTENTION CABLE
22 BATTERY MINUS (-) CONNECTION
23 PLUS (+) CONNECTION FOR CHARGING DISTRIBUTOR
24 STARTER BATTERY PLUS (+) CONNECTION
25 CONTROL CABLE
26 AIR INLET SILENCER
27 WATER DRAIN, FRESH WATER
28 WATER DRAIN, SEA WATER

SYMBOLS, DESIGNATIONS AND GENERAL DRAWING METHODS SFS 1027/1027

Drawing
ENGINE INSTALLATION
D2-55 / HS25A

VOLVO PENTA

Drawing type
INSTALLATION DRAWING

Drawing no
3590618

Issue date
02

Sheet no
1/1

Plus d'informations sur : www.dbmoteurs