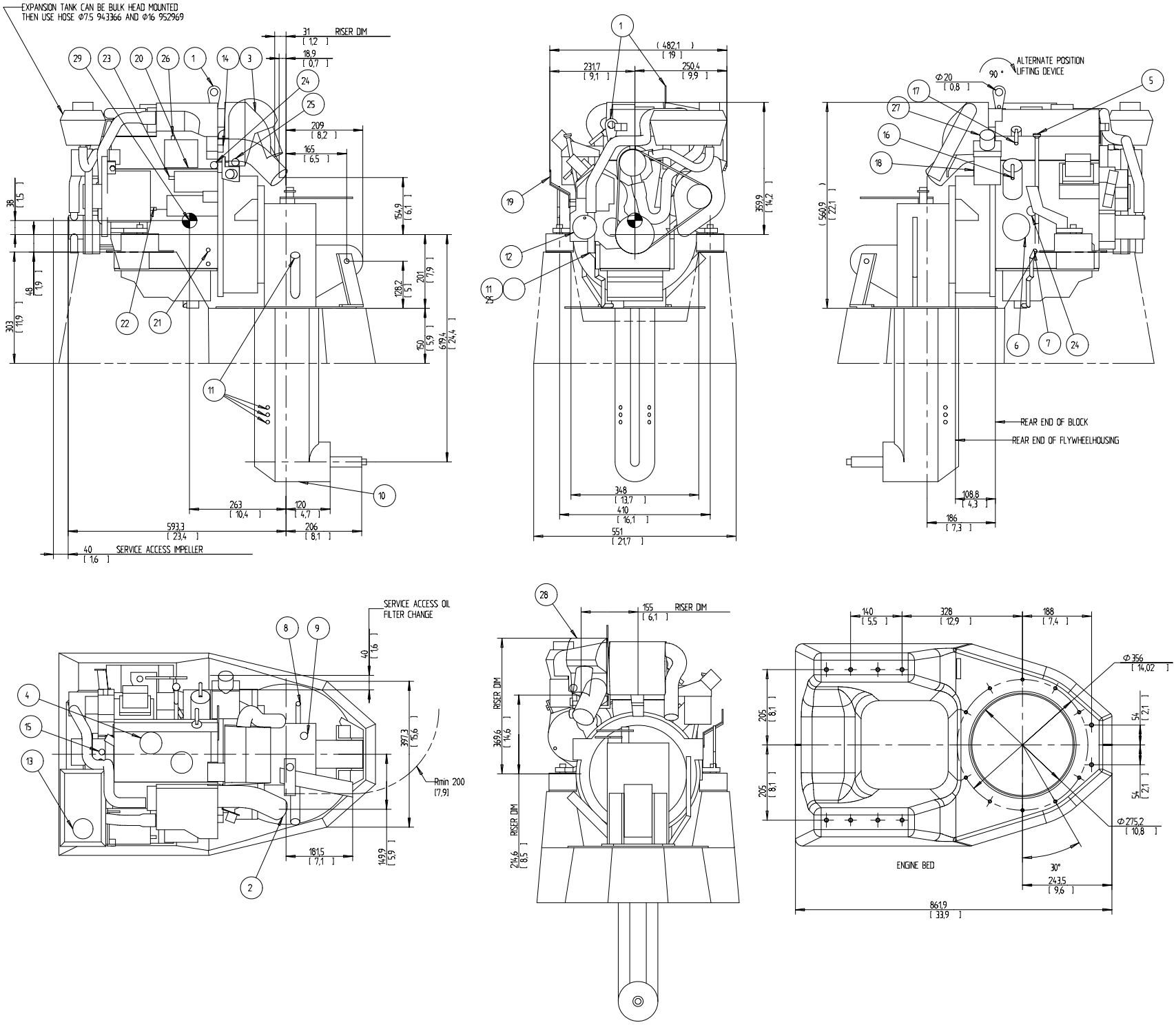

SCALE 1:5

OIL CAPACITY INCLUDING OIL FILTER: 3.5 LITERS

FRESHWATER SYSTEM CAPACITY: 4.1 LITERS

WEIGHTS:
DRY 154 kg
OIL & WATER 161 kg

DIMENSION IN MILLIMETRES AND [INCHES]

NR	ITEM
1	LIFTING DEVICE
2	EXHAUST ELBOW FOR HOSE I.D 45[1,75]
3	AIR FILTER (SILENCER)
4	OIL FILLING
5	OIL DIPSTICK ENGINE
6	OIL FILTER
7	OIL DRAIN (WITH PUMP) ENGINE I.D 8 [0.35]
8	OIL DIPSTICK REVERSE GEAR
9	OIL FILLER CAP REVERSE GEAR
10	OIL DRAIN REVERSE GEAR
11	SEAWATER INLET FOR HOSE I.D 19[0,75]
12	SEA WATER PUMP
13	WATER FILLER CAP FRESH WATER
14	HOTWATER OUTLET
15	HOTWATER INLET
16	FUEL CONNECTION FOR HOSE I.D 10 [3/8]
17	FUEL RETURN CONNECTION FOR HOSE I.D 10 [3/8]
18	FUEL FILTER
19	SPEED CONTROL LEVER
20	CONNECTION BOX FOR EXTENSION CABLE
21	BATTERY MINUS (-) CONNECTION
22	PLUS (B+) CONNECTION FOR CHARGING DISTRIBUTOR
23	STARTER BATTERY PLUS (+) CONNECTION
24	WATER DRAIN FRESH WATER
25	WATER DRAIN SEAWATER
26	AUTOMATIC FUSE RESET
27	HAND PRIMER PUMP
28	RISER (OPTIONAL)
29	CENTRE OF GRAVITY

Engineering Release Notice 6598 | Location | Change description A=Added M=Moved D=Deleted | P/A: D: 1 . 3+ . main | Document release status: RELEASED | Date | Modification count

SYMBOLS, DESIGNATIONS AND GENERAL DRAWING METHODS STD 101-0005 AND STD 5023503

The copying, distribution and utilization of this document as well as the communication of its contents to others without expressed authorization is prohibited. Offenders will be held liable for payment of damages. All rights reserved in the event of the grant of a patent, utility model or ornamental design registration.

Document title: ENGINE DIMENSIONS D1-30/130S

VOLVO PENTA

Document type: DIMENSION DRAWING

Owner domain/Document prefix

Document No: 3591392 | Issue index: 01 | Sheet No: 1(1)

SIZE A1

Plus d'informations sur : www.dbmoteurs.fr